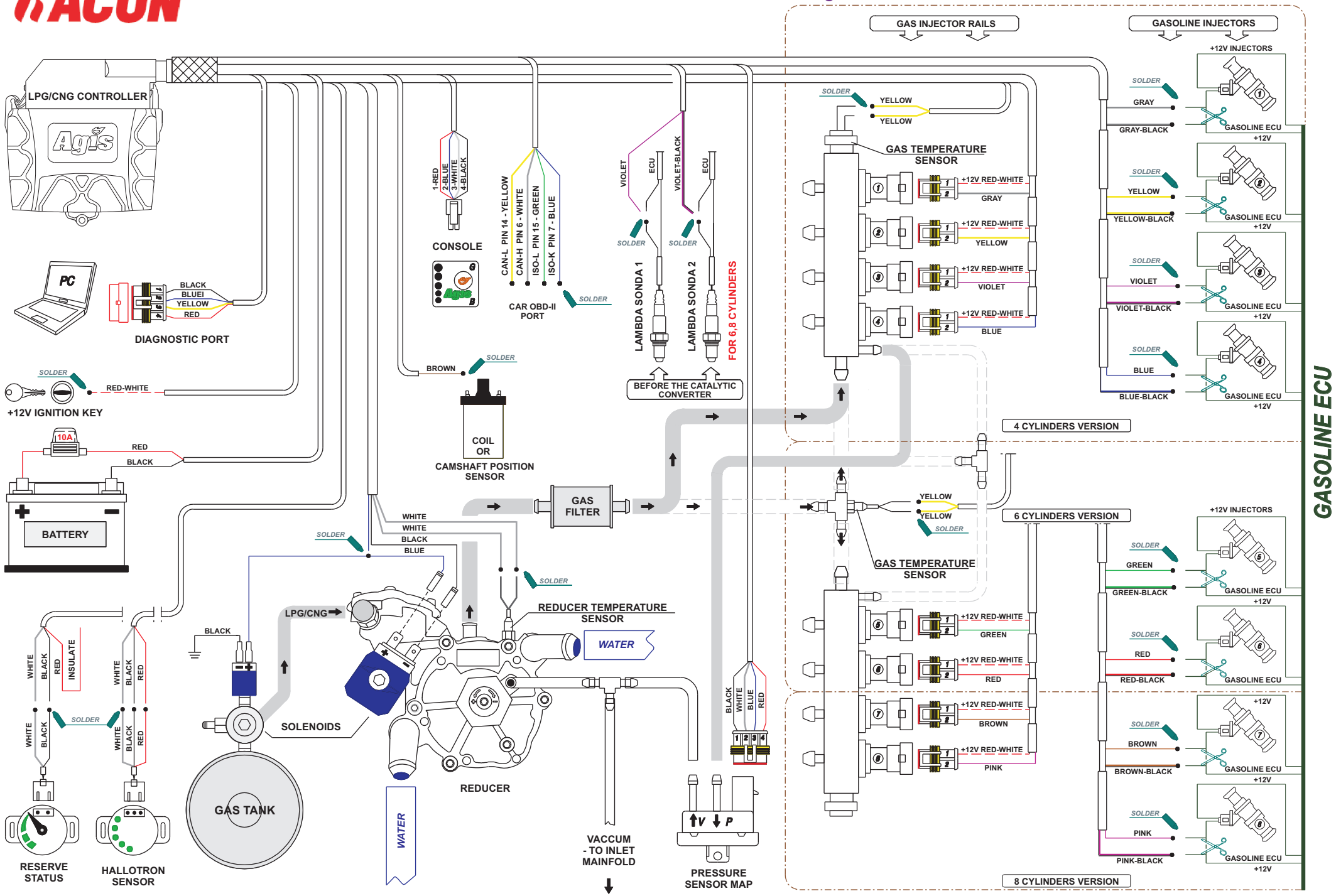AGIS OBD/ISO CONTROLLER - connection diagram